MonoPrinter.com

MONO3
FEP Film Replaceme

Rev. 1.0

Microfluidics for all, Inc.
24 Denby Rd, Suite 120, Allston, MA 02134
Tel: +1-617-999-4977 Email: info@monoprinter.com
Web: http://www.monoprinter.com

Revision History

Rev. 1.0	06-20-2023	Initial draft

Please read thoroughly and contact us if you have any further questions or suggestions at info@monoprinter.com

A. Removal of Used Film

1. Parts you need

- Hex drivers (2.0 mm, 2.5 mm)

2. Remove a film retainer

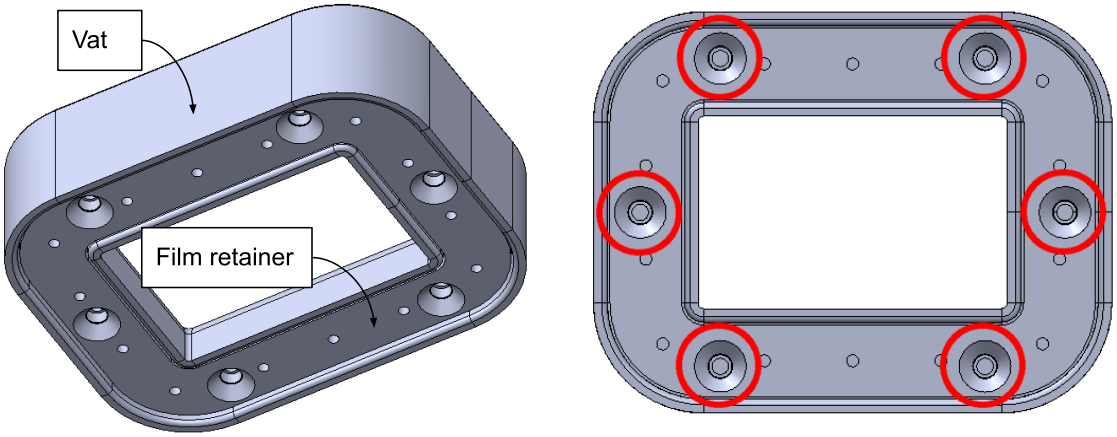

Fig. 1. Position of 6 x m4 flat screws

- Remove all of the m4 flat screws using a 2.5 mm hex driver.
- Then, you can remove the film retainer from the vat.

CAUTION *The file name should start with "PRJ-PTN" to be used in the single layer exposure*

3. Disassemble the film retainer

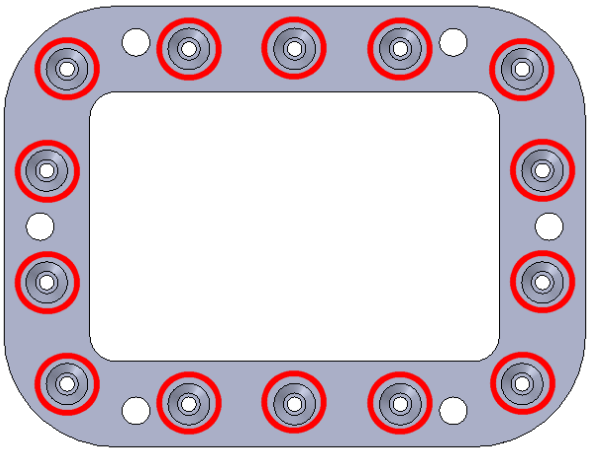

Fig. 2. Position of 14 x m3 flat screws

- Remove all of the m3 flat screws using a 2.0 mm hex driver.
- Now you can separate two film retainers.
- Clean all parts using a dry tissue with some alcohol (ex. IPA).

MonoPrinter.com (Part of Microfluidics for all, Inc.)
24 Denby Road, Suite 120, Allston, MA 02134,
Phone: +1-617-999-4977, Email: info@monoprinter.com
Web: http://www.monoprinter.com

B. Installing a New Film

4. New film installation

- You can install a new film by reverse procedure of steps 2 and 3 above.

  INFO *The pre-installed film is 50 um thick FEP film. You can test other thickensses and other film materials.*

  CAUTION *Do not over-tighten the screws. It will lead to stripped screws.*

C. Troubleshooting

5. Resin leaks

- The film is basically sandwiched by two film retainers, so it's more reliable than a single retainer structure, but it might have leaks from insufficient sealing.
- If you experience a leak, add a rubber tape on top of the film retainer after assembling 14 x m3 screws, and before final assembly using the m4 screws.

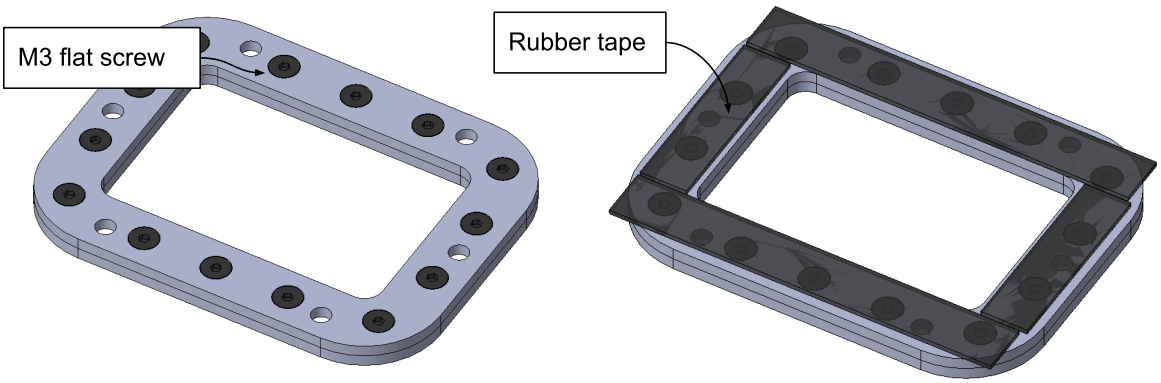

Fig. 3. Application of an (electrical insulation) rubber tape

6. Closing remarks.

- If you have any issues during installation, contact us at info@monoprinter.com.

MonoPrinter.com (Part of Microfluidics for all, Inc.)
24 Denby Road, Suite 120, Allston, MA 02134,
Phone: +1-617-999-4977, Email: info@monoprinter.com
Web: http://www.monoprinter.com